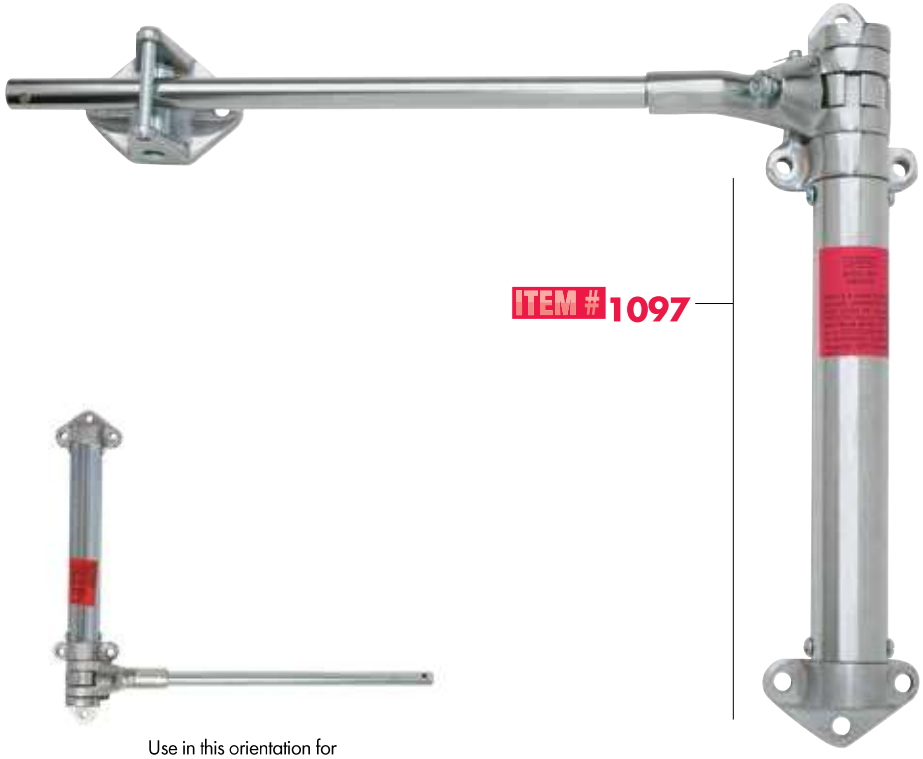

Use in this orientation for left-hand doors.

1097 SPRING ACTION DOOR CLOSER

- High tension closer recommended for doors exceeding 200 lbs. (90.7kg)
- Spring tension can be set to close door under a wide range of conditions.
- Roller rod guide assures smooth operation with either rise or fixed pin hinges.
- Invert for left-hand applications

SPECIFICATIONS

MATERIAL:
Malleable iron with steel rod and tube.

FINISH:
See order information.

OFFSET:
1-5/8" (41.28) maximum without shimming or special consideration. Consult factory on larger offsets.

MOUNTING:
Guide drilled for 1/4" (6.0mm) screws. Closer drilled for 3/8" (9.0mm) screws (included). Mount just above lower hinge for best results.

PACKAGING:
1 per carton.

WEIGHT:
Approx. 13.5 lb. (6.1kg) per carton.

Model No.	Item	Finish
11097000004	Closer	Zinc Plated
11097000008	Closer	Chrome
11097000012	Spring Cartridge Kit	Zinc Plated
11097000016	Spring Cartridge Kit	Chrome

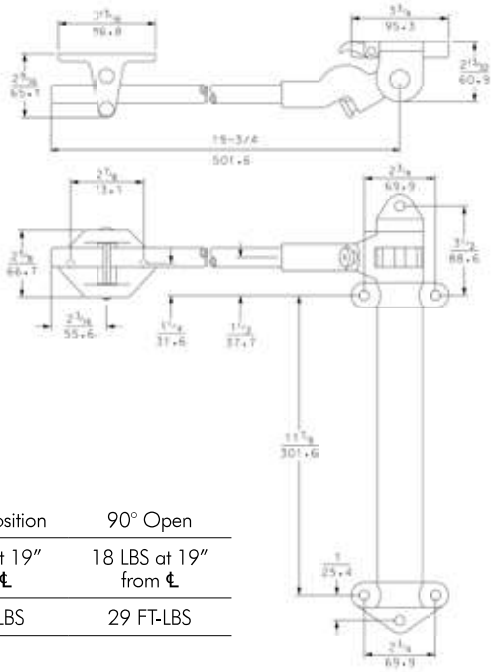

	Closed Position	90° Open
Max Force Output	16 LBS at 19" from ℄	18 LBS at 19" from ℄
	25 FT-LBS	29 FT-LBS

Right hand orientation shown.

CAUTION:

For operator safety, Model No. 1097 door closer is intended to be used where high force is necessary to close heavy doors. Mount door closer as low as possible.

This is a high tension device. Improper use can lead to injury. Tension adjustment maximum wind up of 2-1/3 revolutions or 14 notches. Further winding may damage unit. Move pawl out of gear after winding. Do not use to hold door open.

© 2019 Kason Industries, Inc.

0119 LIT 001