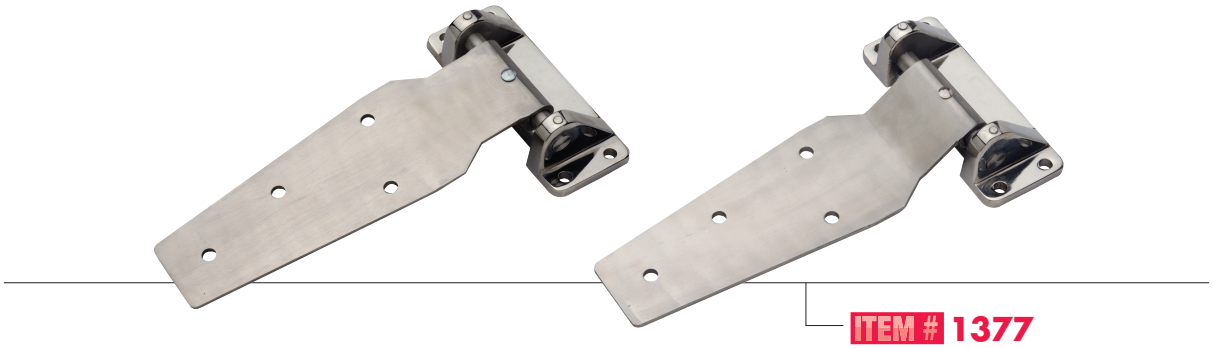

1377S & 1377L STAINLESS STEEL SELF-CLOSING HINGES

HEAVY DUTY CORROSION RESISTANT

- Self-closing, cam-rise hinge is extra rugged for challenging applications.
- Precision-machined stainless steel cams gently raise and lower large doors.
- Cam action assures effortless opening and less gasket wear.
- Strap reverses for right- or left-opening door without disassembly.
- No dwell.

SPECIFICATIONS

MATERIAL:
Polished #316 Series stainless steel flange, 3/16" (5mm) thick strap and 5/8" (16mm) diameter cam pins

STRAP LENGTH:
11-5/8" (294mm) offsets. See table below

MOUNTING:
Drilled for 3/8" (10mm) screws

PACKAGING:
4 each

LOAD RATING:
Kason Hinge Selector Chart, Group G, Page B-24

1377L

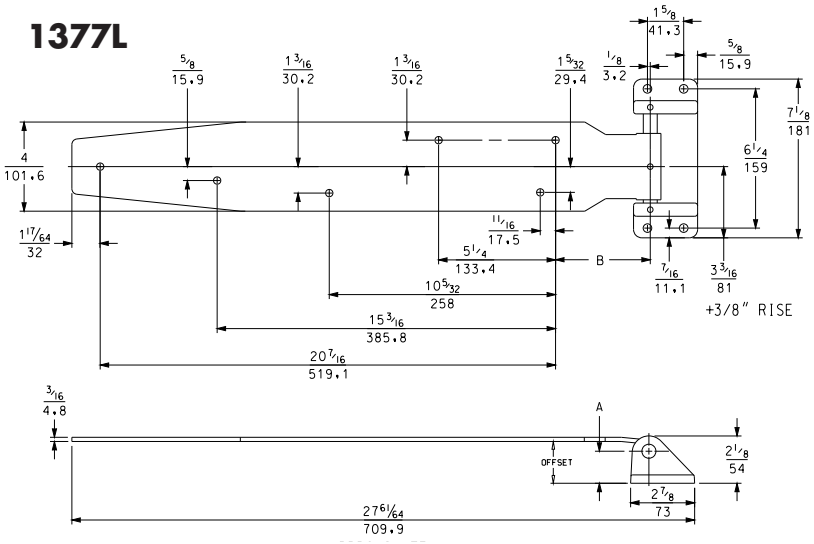

1377S

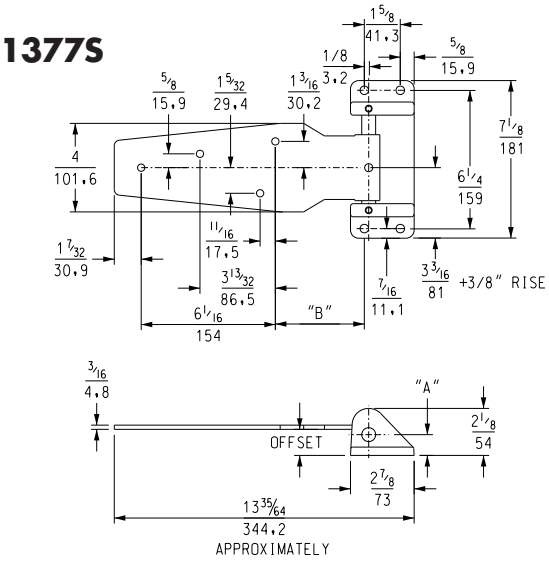

Model No.	Offset	"A"	"B" (Approx.)	Strap Length
11377L00004	Flush (0.0mm)	15/16" (23.8mm)	3-31/32" (100.8mm)	
11377L00008	1-1/8" (29mm)	15/16" (23.8mm)	4-3/32" (104.0mm)	
11377L00010	1-1/4" (32mm)	15/16" (23.8mm)	4-1/8" (104.8mm)	
11377L00012	1-3/8" (35mm)	15/16" (23.8mm)	4-3/32" (104.0mm)	26" (685.8 mm)
11377L00014	1-1/2" (38mm)	1-5/16" (33.3mm)	4-3/32" (104.0mm)	
11377L00016	1-5/8" (41mm)	1-5/16" (33.3mm)	4-1/8" (104.8mm)	
11377L00018	1-3/4" (45mm)	1-5/16" (33.3mm)	4-3/32" (104.0mm)	
11377S00004	Flush (0.0mm)	15/16" (23.8mm)	3-31/32" (100.8mm)	
11377S00008	1-1/8" (29mm)	15/16" (23.8mm)	4-3/32" (104.0mm)	
11377S00010	1-1/4" (32mm)	15/16" (23.8mm)	4-1/8" (104.8mm)	
11377S00012	1-3/8" (35mm)	15/16" (23.8mm)	4-3/32" (104.0mm)	11-5/8" (293.7 mm)
11377S00014	1-1/2" (38mm)	1-5/16" (33.3mm)	4-3/32" (104.0mm)	
11377S00016	1-5/8" (41mm)	1-5/16" (33.3mm)	4-1/8" (104.8mm)	
11377S00018	1-3/4" (45mm)	1-5/16" (33.3mm)	4-3/32" (104.0mm)	

© 2016 Kason Industries, Inc.